Institutional Monitor

Instructions for Use

PS1132C

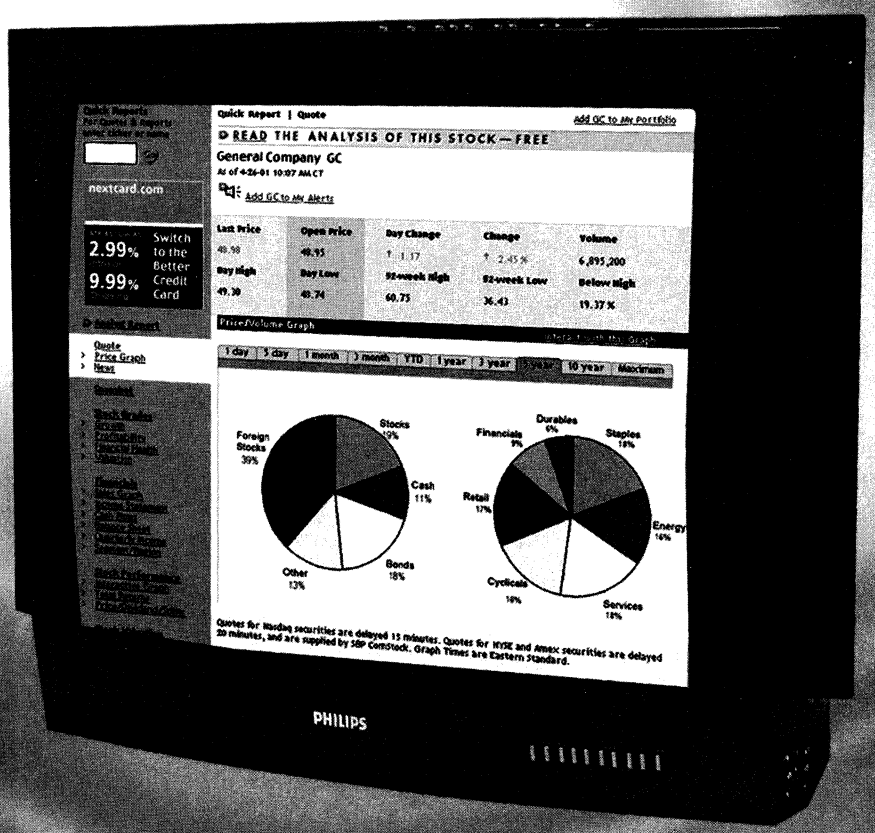

Setting Industry Standards™

Let's make things better.

PHILIPS

Instructions for Polaris

SAFETY INSTRUCTIONS - Read before operating equipment

This product was designed and manufactured to meet strict quality and safety standards. There are, however, some installation and operation precautions which you should be particularly aware of.

1. **Read Instructions** - All the safety and operating instructions should be read before the appliance is operated.
2. **Retain Instructions** - The safety and operating instructions should be retained for future reference.
3. **Heed Warnings** - All warnings on the appliance and in the operating instructions should be adhered to.
4. **Follow Instructions** - All operating and use instructions should be followed.
5. **Water and Moisture** - The appliance should not be used near water - for example, near a bathtub, washbowl, kitchen sink, laundry tub, in a wet basement or near a swimming pool, etc.
6. **Carts and Stands** - The appliance should be used only with a cart or stand that is recommended by the manufacturer.

6A. 
An appliance and cart combination should be moved with care. Quick stops, excessive force, and uneven surfaces may cause the appliance and cart combination to overturn.

6B. **Tilt/Stability** - All televisions must comply with recommended international global safety standards for tilt and stability properties of its cabinet design.
- Do not compromise these design standards by applying excessive pull force to the front, or top, of the cabinet which could ultimately overturn the product.
- Also, do not endanger yourself, or children, by placing electronic equipment/toys on the top of the cabinet. Such items could unsuspectingly fall from the top of the set and cause product damage and/or personal injury.

7. **Wall or Ceiling Mounting** - The appliance should be mounted to a wall or ceiling only as recommended by the manufacturer.
8. **Ventilation** - The appliance should be situated so that its location or position does not interfere with its proper ventilation. For example, the appliance should not be situated on a bed, sofa, rug, or similar surface that may block the ventilation openings; or, placed in a built-in installation, such as a bookcase or cabinet that may impede the flow of air through the ventilation openings.
9. **Heat** - The appliance should be situated away from heat sources such as radiators, heat registers, stoves, or other appliances (including amplifiers) that produce heat.
10. **Power Sources** - The appliance should be connected to a power supply only of the type described in the operating instructions or as marked on the appliance.
11. **Power-Cord Protection** - Power supply cords should be routed so that they are not likely to be walked on or pinched by items placed upon or against them, paying particular attention to cords and plugs, convenience receptacles, and the point where they exit from the appliance.
12. **Cleaning** - The appliance should be cleaned only as recommended by the manufacturer.
13. **Power Lines** - An outdoor antenna should be located away from power lines.
14. **Outdoor Antenna Grounding** - If an outside antenna is connected to the receiver, be sure the antenna system is grounded so as to provide some protection against voltage surges and built up static charges.

    Section 810 of the National Electric Code, ANSI/NFPA No. 70-1984, provides information with respect to proper grounding of the mats and supporting structure grounding of the lead-in wire to an antenna discharge unit, size of grounding connectors, location of antenna-discharge unit, connection to grounding electrodes and requirements for the grounding electrode. See Fig. below.
15. **Non-use Periods** - The power cord of the appliance should be unplugged from the outlet when left unused for a long period of time.
16. **Object and Liquid Entry** - Care should be taken so that objects do not fall and liquids are not spilled into the enclosure through openings.
17. **Damage Requiring Service** - The appliance should be serviced by qualified service personnel when:
    - **A.** The power supply cord or the plug has been damaged; or
    - **B.** Objects have fallen, or liquid has been spilled into the appliance; or
    - **C.** The appliance has been exposed to rain; or
    - **D.** The appliance does not appear to operate normally or exhibits a marked change in performance; or
    - **E.** The appliance has been dropped, or the enclosure damaged.
18. **Servicing** - The user should not attempt to service the appliance beyond that described in the operating instructions. All other servicing should be referred to qualified service personnel.

Note to the CATV system installer: This reminder is provided to call the CATV system installer's attention to Article 820-40 of the NEC that provides guidelines for proper grounding and, in particular, specifies that the cable ground shall be connected to the grounding system of the building, as close to the point of cable entry as practical.

Example of Antenna Grounding as per NEC - National Electric Code

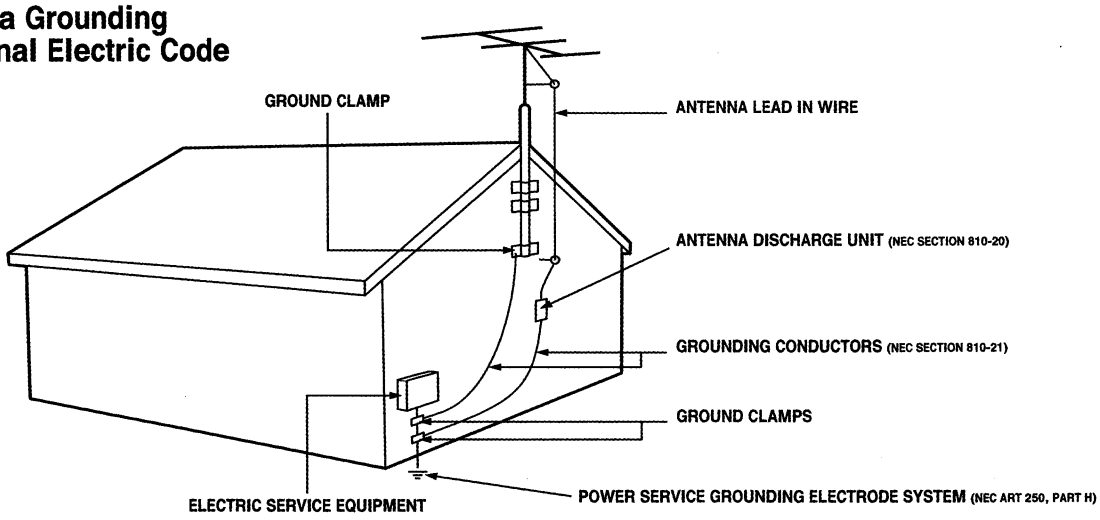

Thank you for purchasing PHILIPS PS1132C Large Screen Display

FEATURES

- 34-inch CRT with 32-inch viewable image.
- Auto-scanning frequency of 30-48 kHz horizontally and 50-120 Hz vertically. This allows compatibility with video equipment and personal computers.
- Loud speakers 2 x 10W.
- OSD controls of Contrast, Brightness, Color Temperature, Color Adjustment, Degauss for Video adjustments; Treble, Bass, Balance, Surround, DYN. Bass Boost, Parallelogram, Speaker for Audio adjustments; V-Size/Position and H-Size/Position for screen Size and Position adjustments; Tilt, Pincushion and Trapezoid for Geometry adjustments and Factory Reset.
- Capable of connecting various multimedia and home entertainment equipment; for example, VCR, DVD player, LD player, stereo systems, cable television, video camera or Set-Top-Box, etc.
- Y-Cb-Cr Video Input Connector for enhanced DVD Performance.
- Dynamic Focusing Circuit for advanced clarity.
- Scan Velocity Modulation Circuit for rich colored images.
- Compatible with VGA, SVGA, XGA, VESA of PC standard signal, 1024 x 768.
- IR remote control
- Built-in microprocessor controls picture size and centering in accordance with input signals. It also memorizes the picture data.

PLEASE READ IMPORTANT SAFETY FEATURES AND INSTRUCTIONS THOROUGHLY BEFORE USAGE.

[illegible]

[illegible]

[illegible]

Contents

1 Package contents

Check that 5 items are present and in good condition:

1. PHLIPS PS1132C Large Screen Display (with attached power cord)
2. Remote control
3. 2 AAA batteries
4. 15-pin video signal cable
5. User manual

2 Installation and Preparation

2.1 REAR PANEL connectors

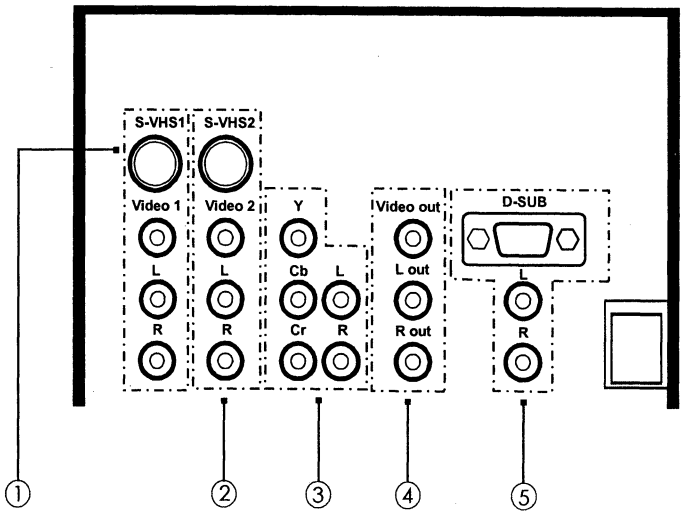

① **S-VHS-1:** connect to equipment such as VCR, DVD, LD, camcorder, TV game with an s-video signal cable.

VIDEO 1: connect to a device such as TV Game, CATV, VCR, DVD, LD, camcorder, etc..

L/R audio jacks: connect to CD player or audio system.

Note: *If both S-VHS-1 and VIDEO 1 are occupied, the monitor will select the output to S-VHS-1 connection for better picture quality.*

② **S-VHS-2:** function the same as S-VHS-1.

VIDEO 2: function the same as Video 1.

L/R audio jacks: connect to audio system.

③	**Y-Cb-Cr jacks:**	connect to DVD player.
	L/R audio jacks:	connect to audio system.
④	**VIDEO out:**	connect to VCR with video signal.
	L out/R out:	connect to VCR with audio signal.
⑤	**PC 1:**	connect the 15-pin video signal cable to your PC system.
	L/R audio jacks:	connect to PC, Internet / Intranet with audio signal.

2.2 USA power cord connector

For USA area, connect the 15-pin video signal cable to the PC 1 jack. Plug the power cord to the power outlet.

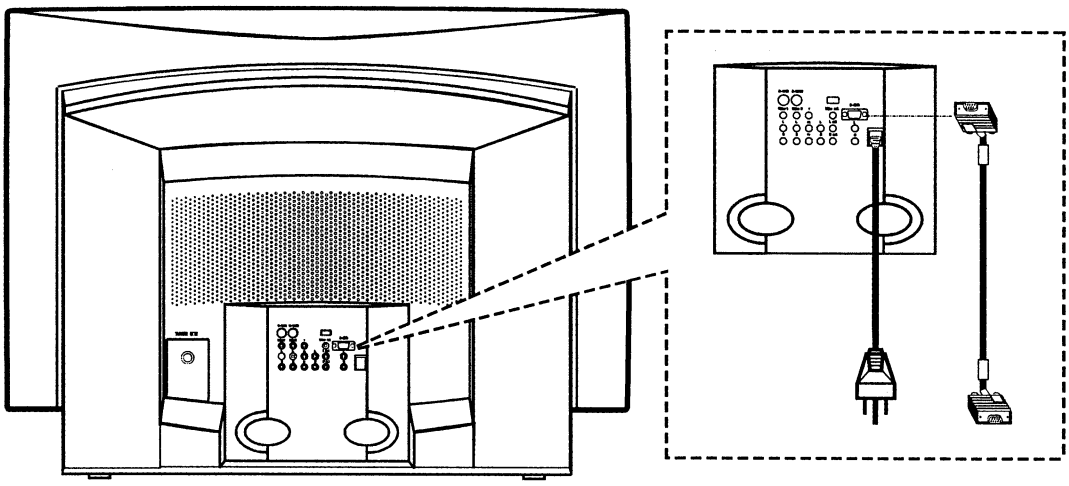

2.3 FRONT PANEL connectors

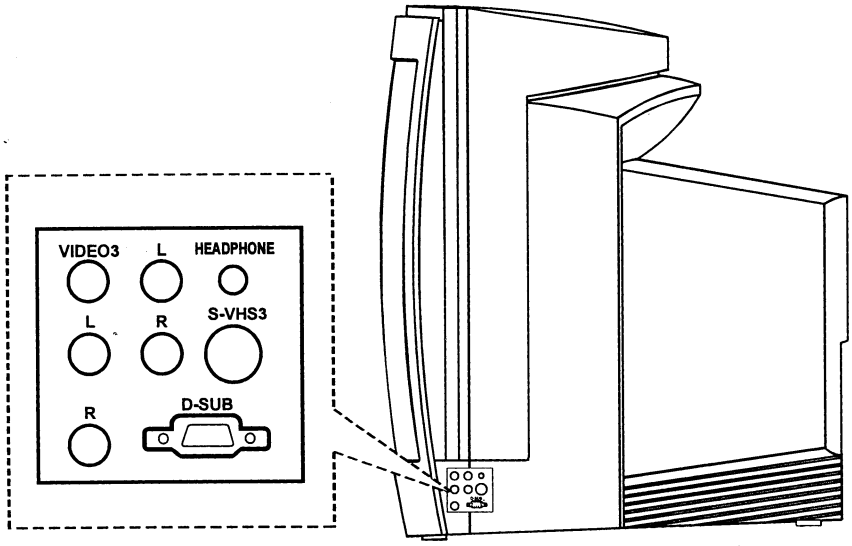

VIDEO 3 input jack:	connect to VCR, DVD, etc..
HEADPHONE:	connect to headphones.
S-VHS-3:	connect to equipment such as VCR, DVD, LD, camcorder, TV game with a s-video signal cable.
PC 2:	The 2nd source of PC input connection. It is connected by a 15-pin video cable to your PC.

3 Panel buttons

MASTER POWER switch is located on the lower left hand side of the cabinet.

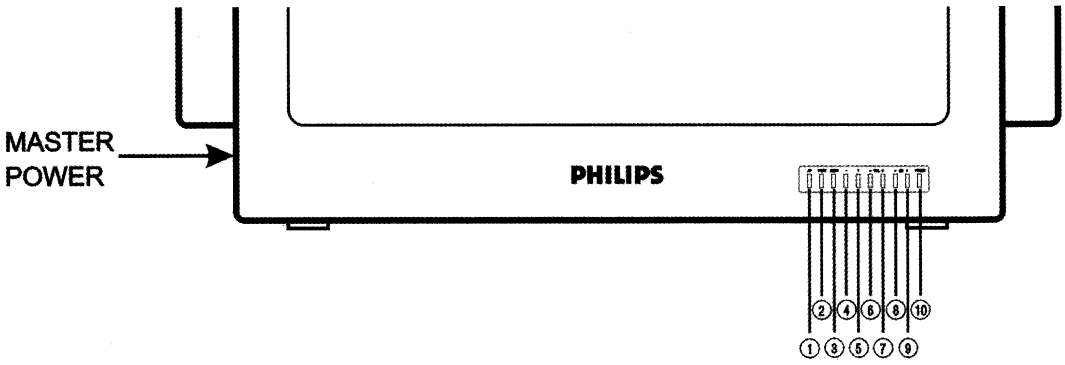

3.1 FRONT PANEL buttons

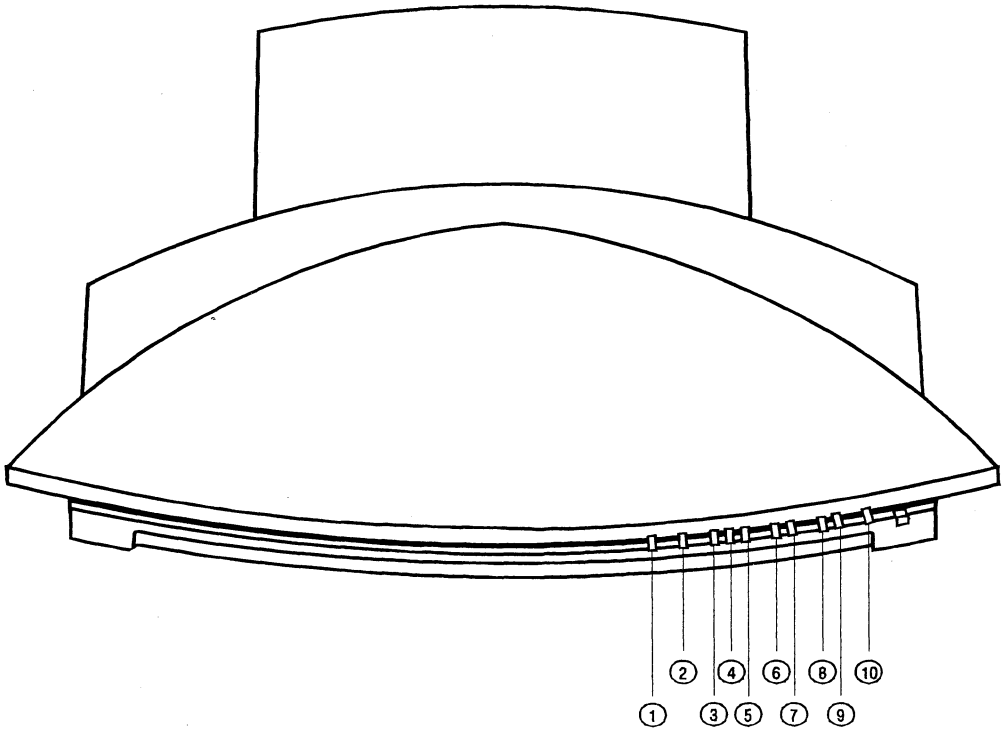

①	**TV/AV:**	select the video source among TV/AV1/AV2/AV3.
②	**PC/VIDEO:**	select the input source among Video/PC1/PC2.
③	**MENU:**	activate the main menu; selects or executes a function.
④	**'-' key:**	move the highlighted bar down or decreases the value of a parameter.
⑤	**'+' key:**	move the highlighted bar up or increases the value of a parameter.
⑥	**VOL (-) key:**	decrease volume.
⑦	**VOL (+) key:**	increase volume.
⑧	**CH (-) key:**	step down the channels; for previous channel.
⑨	**CH (+) key:**	step up the channels; for next channel.
⑩	**POWER/ Stand-by:**	switch the power ON/stand-by.

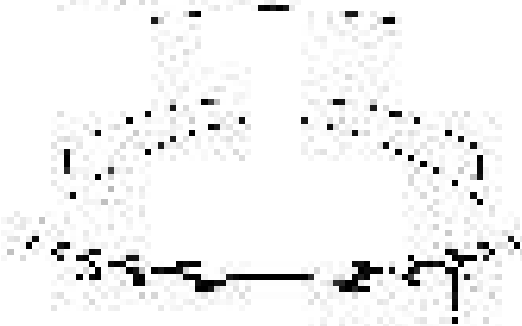

[illegible]

4 Remote control keys

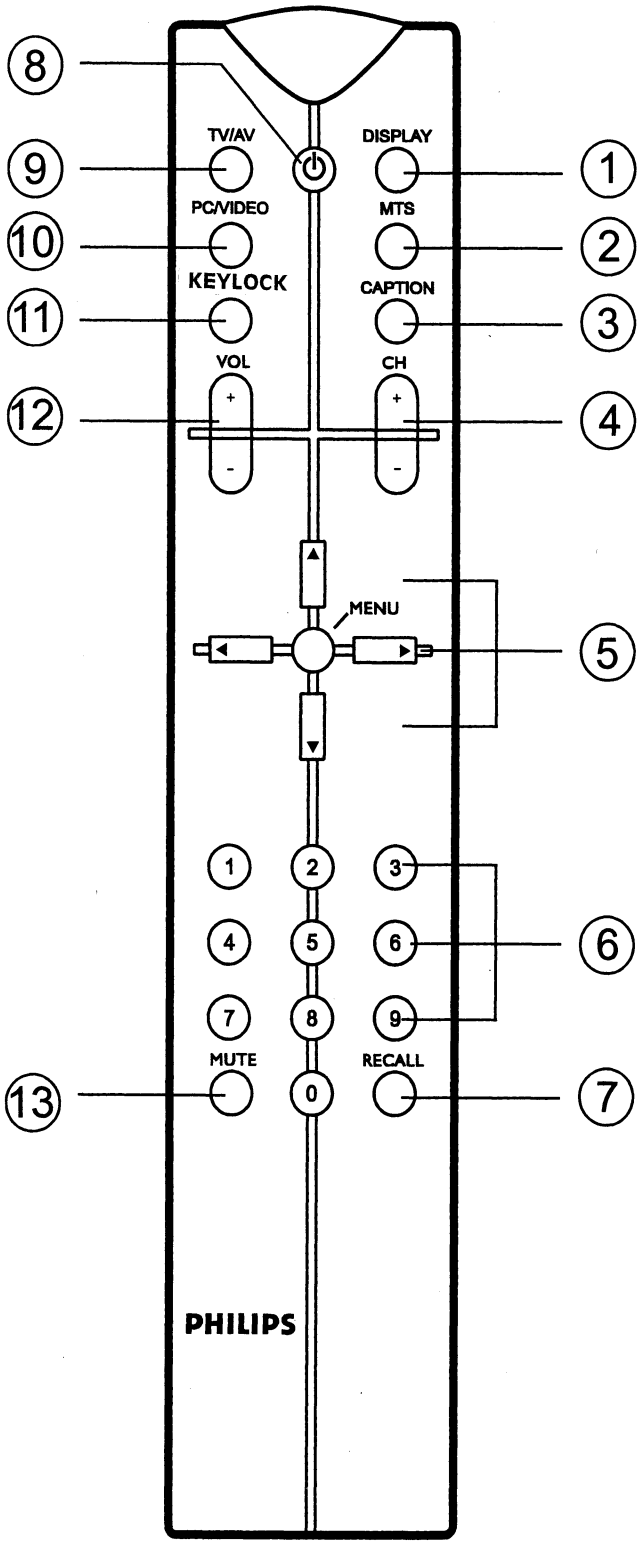

1	**DISPLAY:**	show the current status of the setting mode.
2	**MTS key:**	select multi-audio mode from MAIN/SAP/DUAL.
3	**CAPTION:**	select closed caption from OFF/CC1/CC2/CC3 /CC4/T1/T2.
4	**CH (+) key:**	step up the channels; for next channel.
	CH (-) key:	step down the channels; for previous channel.
5	**MENU:**	activate the main menu; select or execute a function.
	▲ key:	move the highlighted bar up or increase the value of a parameter.
	▼ key:	move the highlighted bar down or decrease the value of a parameter.
	▶ key:	increase the value of a parameter or go to the next menu.
	◀ key:	decrease the value of a parameter or go back to the previous menu.
6	**0--9 keys:**	number keys to select TV channels directly.
7	**RECALL:**	jump to the last viewing channel.
8	**POWER/ Stand-by:**	switch the power ON/OFF.
9	**TV/AV:**	select the video source from TV/AV1/AV2/AV3.
10	**PC/VIDEO:**	select the input source from Video/PC1/PC2.
11	**KEYLOCK :**	For PANEL BUTTON lock / unlock.
12	**VOL (+) key:**	increase volume.
	VOL (-) key:	decrease volume.
13	**MUTE:**	switch audio to the mute mode.

***Note**: Install two AAA batteries into the compartment using correct polarity (+,-).*

5 OSD controls

This screen adjustment tool offers user-friendly functions for setting adjustment. Users can make necessary changes to the pre-set resolutions. Settings will be automatically saved and recalled each time a display mode is altered.

Basic operation:

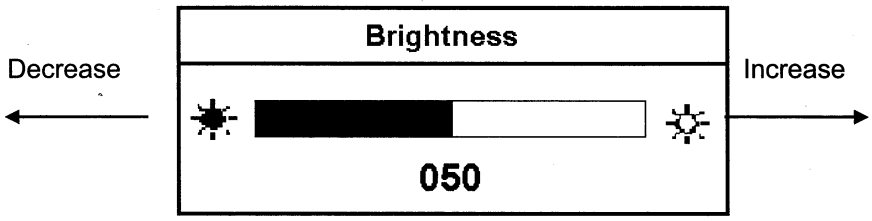

Step **1**: Press MENU key to go to the main menu.

Step **2**: Use ▲/▼ or ◀ / ▶ key on the remote control to adjust parameters.

Use "+" or "-" key on the control panel to adjust parameters.

Step **3**: Press MENU key to return to the previous menu.

Note: *1. Use ◀ or ▶ key to navigate through pages (page-up or page-down) while you are not in the adjusting bar menu.*

2. Move the highlighted bar to RETURN and press MENU to go back to the previous menu.

5.1 MAIN MENU

Press MENU key to display the main menu. Use ▲ or ▼ key to move up and down the highlighted bar to select an option and press **MENU** to choose it.

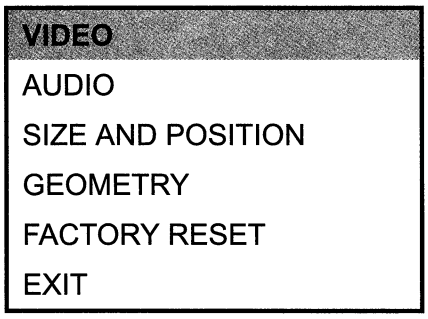

5.2 VIDEO

This function adjusts the video image of the screen.

CONTRAST
BRIGHTNESS
COLOR TEMPERATURE
COLOR ADJUSTMENT
OSD ON / OFF
DEGAUSS
RETURN

Functions	-	+	Description
Contrast			adjust the image contrast in relation to the background
Brightness			control the brightness level of the picture.
Color Temperature	9300K 6500K USER1 USER2		choose a preset color or a user set color mode.
Color Adjustment	R/G/B/ Reset to 9300K/6500K		increase or decrease the intensity of Red, Green or Blue colors or reset to the preset color of 9300K/6500K.
OSD ON / OFF	ON / OFF		show a display mode during input signal change.
Degauss	ON / OFF		demagnetize the monitor and correct color impurity caused by external magnetic field.

5.3 AUDIO

This function adjusts the audio sound of the display. Options include Treble, Bass, Balance, Surround and Speaker.

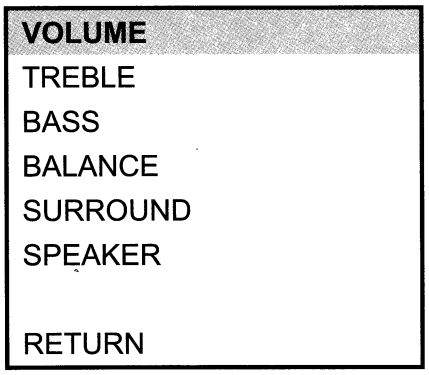

Functions	-	+	Description
Volume			adjust volume of sound.
Treble			adjust high pitch tone of sound.
Bass			adjust low pitch tone of sound.
Balance			control volume between left and right stereo speakers.
Surround	Surround OFF MOVIE MUSIC PSEUDO		select sound effects: Movie and Music are Stereo sources, while Pseudo is a simulated sound for monaural source.
Speaker	ON/OFF		turn speaker's on/off.

5.4 SIZE AND POSITION

This function adjusts the size and position of the screen image, such as vertical size/position and horizontal size/position.

VERTICAL SIZE
VERTICAL POSITION
HORIZONTAL SIZE
HORIZONTAL POSITION
RETURN

Functions	-	+	Description
Vertical size			increase or decrease the display size vertically.
Vertical position			move the display position up or down.
Horizontal size			increase or decrease the display size horizontally.
Horizontal position			move the display position left or right.

5.5 GEOMETRY

This function adjusts the geometric screen image, including tilt, pincushion and trapezoid.

TILT
TRAPEZOID
PARALLELOGRAM
PINCUSHION BALANCE
PINCUSHION
TOP – CORNER
BOTTOM – CORNER

RETURN

Functions	-	+	Description
Tilt			rotate image clockwise or counter clockwise.
Trapezoid			minimize trapezoid distortion of the screen.
Parallelogram			adjust the parallelogram of the screen.
Pincushion Balance			adjust the concavity of the screen.
Pincushion			curve left and right sides of the screen inward or outward.
Top – Corner			correct the top corner of left / right.
Bottom – corner			correct the bottom corner of left / right.

5.6 FACTORY RESET

This function resets the on-screen parameters to its factory settings.

5.7 EXIT

Quit the OSD menu.

6 PC mode menu quick glance

The following flowchart summarizes the OSD procedure for the monitor.

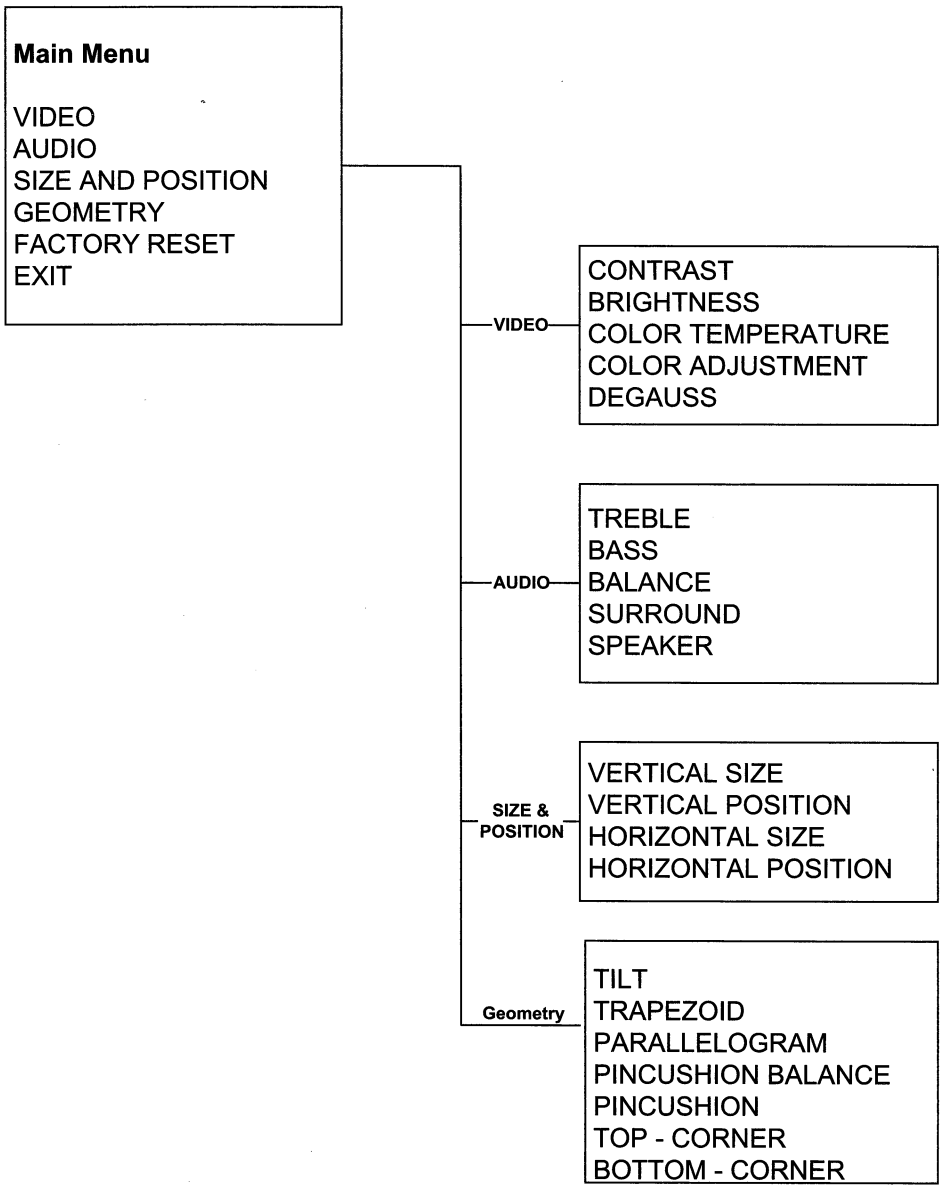

7 Power Consumption

This monitor comes with a power-saving feature that controls the power consumption of the monitor; therefore, you may put the monitor into a reduced power consumption mode when it is not in use. This feature complies with EPA's Energy Star requirements. It conforms to DPMS power-down signaling method approved by Video Electronics Standard Association (VESA).

Mode	H-Sync	V-Sync	Power Consumption
Normal	Active	Active	350W
Stand-by	Active	Inactive	15W
Suspend	Inactive	Active	15W
OFF	Inactive	Inactive	8W

8 Preset modes

Preset modes are standard timings pre-set by the factory. This monitor contains 5 preset modes and 18 user modes.

Preset mode	F_H	F_V
VGA 640 x 480	31.5K	60 Hz
VESA 640 x 480	37.5K	75 Hz
VGA 720 x 400	31.5K	70 Hz
SVGA 800 x 600	37.8K	60 Hz
XGA 1024 x 768	48.3 k	60 Hz

9 Specifications

CRT/Viewable image	34 " /32 "
Strip trio pitch	0.8 mm (center)
Max. resolution	1024 x 768
Face glass	Dark tinted
Input signal	VIDEO input: NTSC, PAL, SECAM standard signal, RGB analog signal PC Input: VGA/SVGA/XGA Standard
Scanning frequency	Horizontal multi-frequency: 30 to 48 kHz Vertical frequency: 50 to 120 Hz
Display area	625mm x 465mm
Audio	Loud speakers: 2 x 10W (RMS) Smart surround control Balance control Bass/Treble control
Connectors	Y/Cb/Cr x 1 rear S-Video x 1 front and x 2 rear A/V-in x 1 front and x 2 rear A/V-out x 1 rear 15-pin D-sub x 1 front and x 1 rear Audio-in for PC sound card x 1 front and x 1 rear Headphone jack
Front panel controls	POWER, TV/AV, PC/VIDEO, MENU, +/-, VOLUME +/-, CH +/-
Infrared remote control unit	TV/AV, PC/Video, Keylock., VOL +/-, Display, MTS, Caption, CH +/-, Arrow keys, Menu, Number keys, Mute and Recall.
OSD controls	Brightness, Contrast, Color Temperature, Color Adjustment, Degauss, Treble, Bass, Balance, Speaker, V-Size, H-Size, V-Position, H-Position, Pincushion, Pincushion Balance, Tilt, Parallelogram, Trapezoid,

Power input	90 - 132 VAC, 60 Hz 180 - 260 VAC, 50 Hz	
Power consumption	Operating maximum: Standby mode:	350 W 15 W
Dimension	(W x H x D) 34.9" x 26.6" x 23.9"	
Weight	Approx. 165 lbs.	

NOTICE:
DUE TO OUR POLICY OF CONTINUOUS PRODUCT IMPROVEMENT, THE SPECIFICATIONS ABOVE ARE SUBJECT TO CHANGES WITHOUT NOTICE. WE SHALL NOT BE LIABLE FOR TECHNICAL OR EDITORIAL ERRORS OR OMISSIONS CONTAINED HEREIN; NOR FOR INCIDENTAL OR CONSEQUENTIAL DAMAGES WHATSOEVER RESULTING FROM FURNISHING, PERFORMANCE OR USAGE OF THIS MATERIAL.

LIMITED WARRANTY

CRT MONITOR

One Year Free Labor

One Year Free Service on Parts (Two Years Free Service on Color Picture Tube)

This product can be repaired in-home.

WHO IS COVERED?

You must have proof of purchase to receive warranty service. A sales receipt or other document showing that you purchased the product is considered proof of purchase.

WHAT IS COVERED?

Warranty coverage begins the day you buy your product. For one year thereafter, all parts will be repaired or replaced, and labor is free. From one to two years from the day of purchase, you pay for the replacement or repair of all parts except the picture tube, and for all labor charges. After two years from the day of purchase, you pay for the replacement or repair of all parts, and for all labor charges. All parts, including repaired and replaced parts, are covered only for the original warranty period. When the warranty on the product expires, the warranty on all replaced and repaired parts also expires.

WHAT IS EXCLUDED?

Your warranty does not cover:

- labor charges for installation or setup of the product, adjustment of customer controls on the product, and installation or repair of antenna systems outside of the product.
- product repair and/or part replacement because of misuse, accident, unauthorized repair or other cause not within the control of Philips Consumer Electronics Company.
- reception problems caused by signal conditions or cable or antenna systems outside the unit.
- a product that requires modification or adaptation to enable it to operate in any country other than the country for which it was designed, manufactured, approved and/or authorized, or repair of products damaged by these modifications.
- incidental or consequential damages resulting from the product. (Some states do not allow the exclusion of incidental or consequential damages, so the above exclusion may not apply to you. This includes, but is not limited to, prerecorded material, whether copyrighted or not copyrighted.)

WHERE IS SERVICE AVAILABLE?

Warranty service is available in all countries where the product is officially distributed by Philips Consumer Electronics Company. In countries where Philips Consumer Electronics Company does not distribute the product, the local Philips service organization will attempt to provide service (although there may be a delay if the appropriate spare parts and technical manual(s) are not readily available).

MAKE SUREYOU KEEP...

Please keep your sales receipt or other document showing proof of purchase. Attach it to this owner's manual and keep both nearby. Also keep the original box and packing material in case you need to return your product.

BEFORE REQUESTING SERVICE...

Please check your owner's manual before requesting service. Adjustments of the controls discussed there may save you a service call.

TO GET WARRANTY SERVICE IN U.S.A., PUERTO RICO OR U.S. VIRGIN ISLANDS...

Contact a Philips factory service center (see enclosed list) or authorized service center to arrange repair.

(In U.S.A., Puerto Rico and U.S. Virgin Islands, all implied warranties, including implied warranties of merchantability and fitness for a particular purpose, are limited in duration to the duration of this express warranty. But, because some states do not allow limitations on how long an implied warranty may last, this limitation may not apply to you.)

TO GET WARRANTY SERVICE IN CANADA...

Please contact Philips at:

1-800-661-6162 (French Speaking)
1-800-363-7278 (English Speaking)

(In Canada, this warranty is given in lieu of all other warranties. No other warranties are expressed or implied, including any implied warranties of merchantability or fitness for a particular purpose. Philips is not liable under any circumstances for any direct, indirect, special, incidental or consequential damages, howsoever incurred, even if notified of the possibility of such damages.)

REMEMBER...

Please record the model and serial numbers found on the product below. Also, please fill out and mail your warranty registration card promptly. It will be easier for us to notify you if necessary.

MODEL # _____

SERIAL # _____

This warranty gives you specific legal rights. You may have other rights which vary from state/province to state/province.

Philips Service Company, P.O. Box 2976, Longview, TX 75606, (903) 242-4800

NJ931A002B